California Faucets®

Miramar™

Single Hole Lavatory/Bar/Prep Faucet - Low Spout

4809-1
4809X-1

Features

- *Available in 28 finishes including 13 PVD finishes*
- *All brass construction*
- *5-5/16" spout center to center*
- *Single handle operation cartridge with ceramic disc*
- *Flexible braided hoses for ease of installation*
- *1.2gpm (4.5 L/min) max flow rate*

4809-1-SN shown

4809X-1-SN shown

Codes/Standards Applicable

Product meets or exceeds the following:

- *ASME A112.18.1/CSA B125.1*
- *NSF 61, NSF 372, CEC & DOE*
- *EPA WaterSense*
- *Commonwealth of MA*
- *ADA compliant (lever handle)*

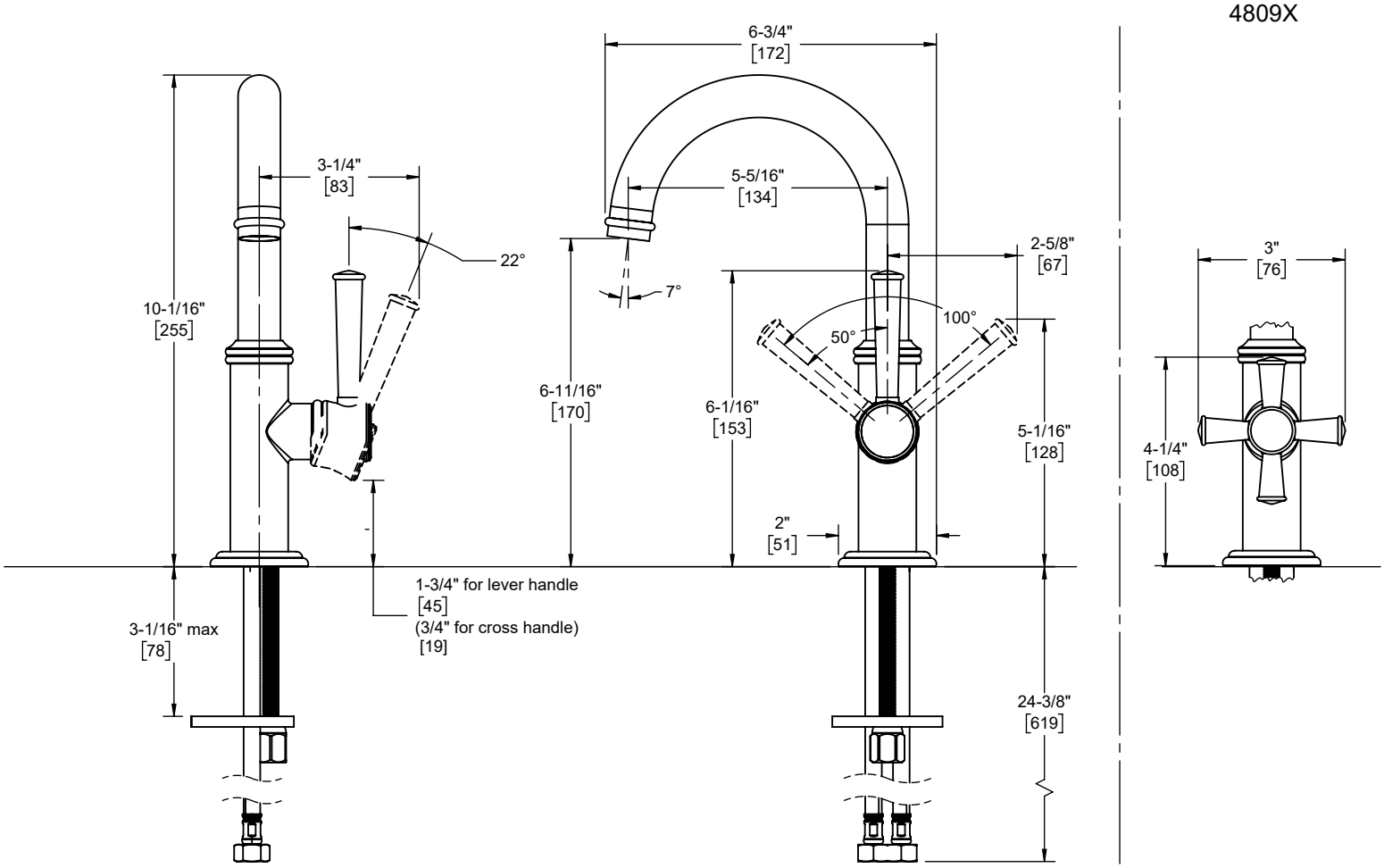

Through-Hole Specifications		
Min	Recommended	Max
Ø1-1/4"	Ø1-3/8"	Ø1-9/16"
[32]	[35]	[40]

Specifications subject to change without notice

Dimensions are inches, rounded to 1/16"
[Dimensions in brackets are mm, rounded to 1mm]