PRODUCT SPECIFICATIONS

Waterbridge Deck-Mounted Tub Filler with Waterfall Spout

Jan 2014

WB-RTF-DM-WF

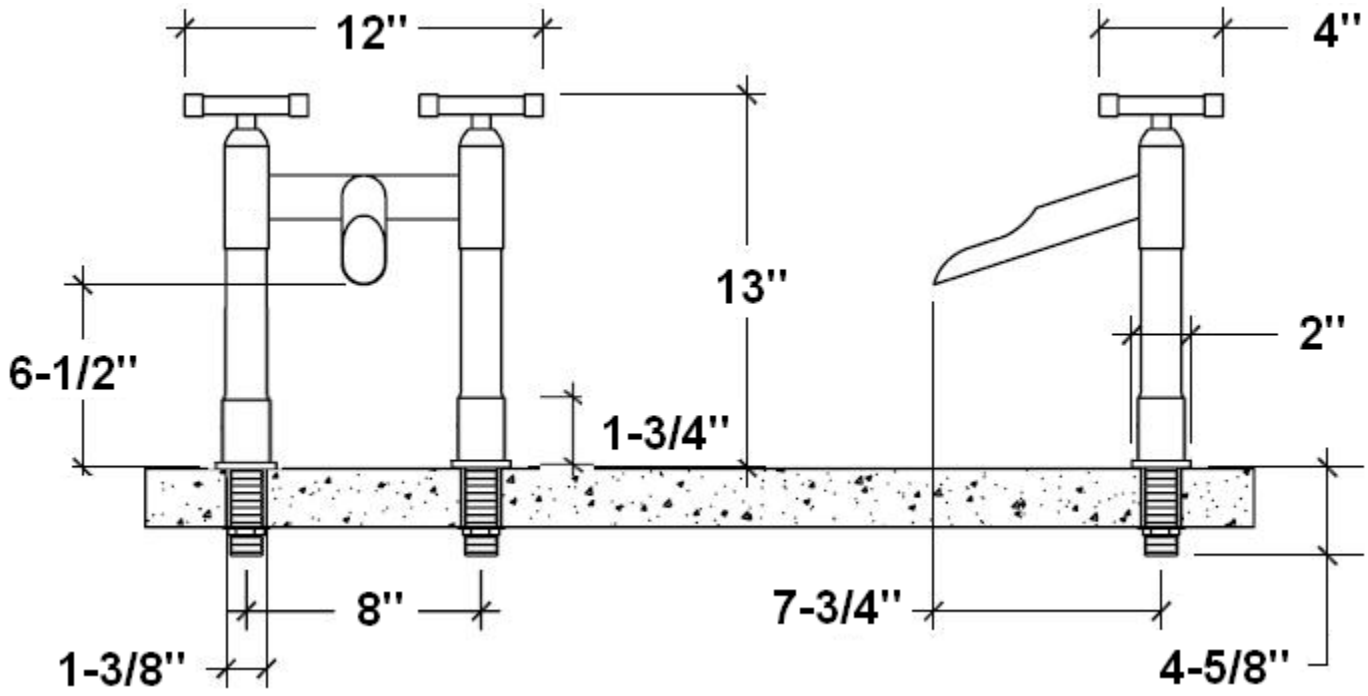

- ADA Compliant
- Offset and Cross handles available
- Custom sizes and finishes available

Connection	3/4" NPS
Valve	3/4" Ceramic
GPM	10-14

800.330.5553 | f 707.789.9201 | info@sonomaforge.com